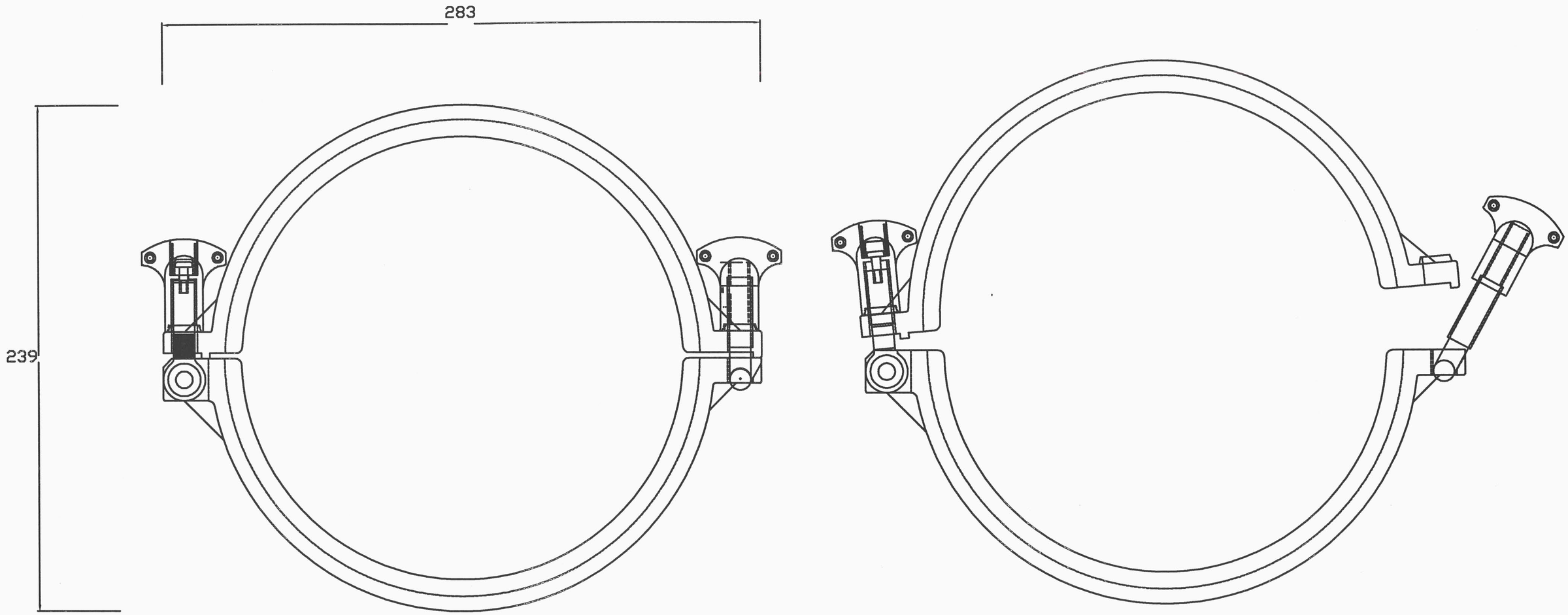

Mod No.	ISSUE	DATE
	1	08.08.07

THIRD ANGLE PROJECTION
B.S. 308

DIMENSIONS IN MILLIMETERS
Unless Otherwise Stated

TOLERANCES UNLESS OTHERWISE STATED
WHOLE NO. ±
ANGULAR DIMS ±
1 DEC. PLACE ±
2 DEC. PLACE ±

DO NOT SCALE

MATERIAL AND SPECIFICATION

ZYTEL 70G30L
WHITE WT192

BioPure Technology Ltd,
Unit M1, Hazleton Interchange,
Lakesmere Road, Horndean, PO8 9JU.
Tel: +44 (0) 2392 499000
Fax: +44 (0) 2392 499001
Email: sales@biopuretech.com
Web: www.biopuretech.com

TITLE BIO-CLAMP		
DRAWING NO. NG800WH		
CUSTOMER		
DRAWN	CHECKED	APPROVED
PWH	RM	RM